THIS INFORMATION IS CONFIDENTIAL AND PROPRIETARY TO TE CONNECTIVITY LTD. AND ITS WORLDWIDE SUBSIDIARIES AND AFFILIATES (TE). IT MAY NOT BE DISCLOSED TO ANYONE, OTHER THAN TE PERSONNEL, WITHOUT AUTHORIZATION FROM TE (www.TE.com).

© 2019 TE Connectivity Ltd. family of companies. All Rights Reserved

DWG NO EPD-204-2190-00

THIS DRAWING IS A CONTROLLED DOCUMENT

USED ON –

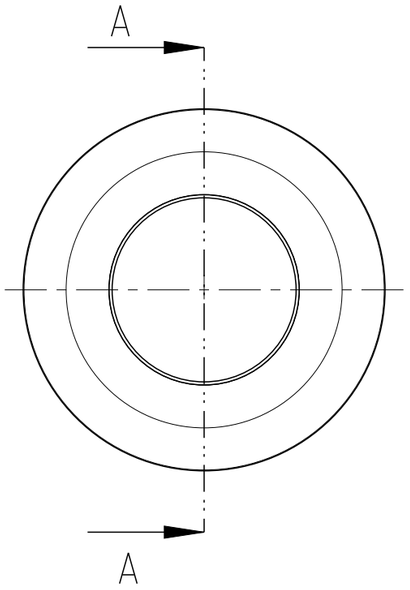

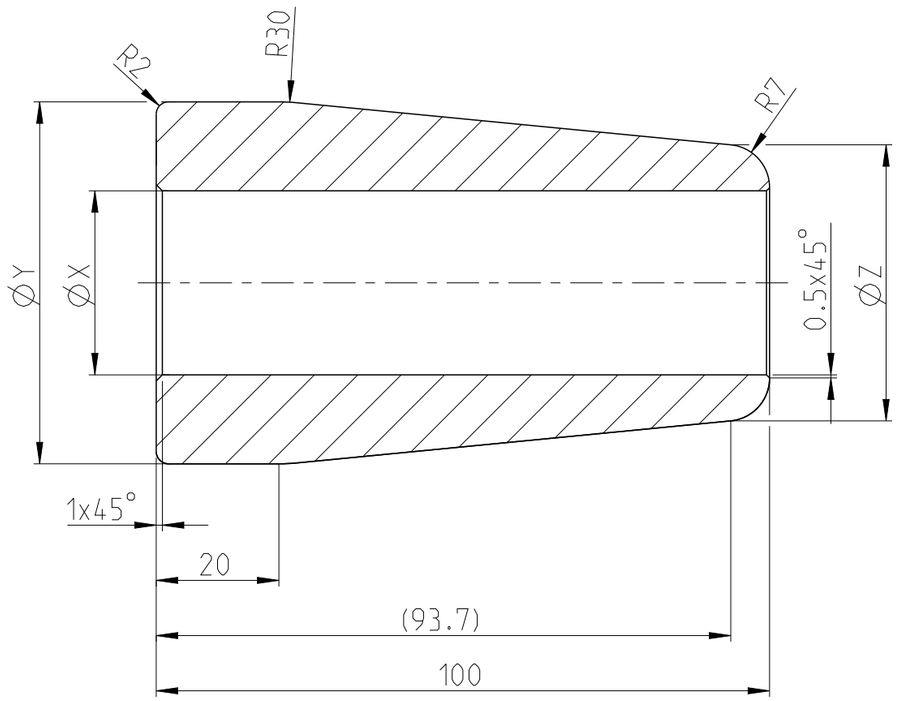

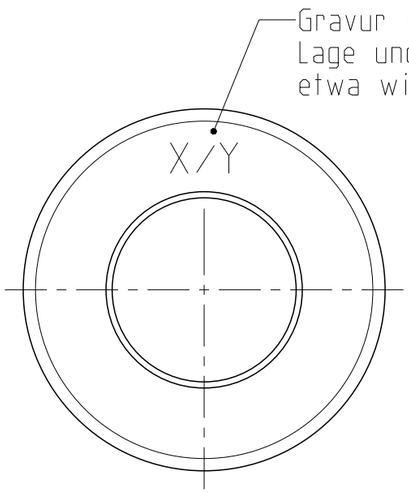

Name/ Description	ØX [mm]	ØY [mm]	ØZ [mm]	Bemerkung/ Comment
HVCA-INST-CONE-30/59	30	59	45	up to 500 mm^2
HVCA-INST-CONE-35/66	35	66	51	up to 630 mm^2
HVCA-INST-CONE-40/75	40	75	58	up to 630 mm^2
HVCA-INST-CONE-40/81	40	81	64	up to 800 mm^2
HVCA-INST-CONE-47/88	47	88	70	up to 1000 mm^2
HVCA-INST-CONE-56/97	56	97	77	up to 1200 mm^2
HVCA-INST-CONE-64/105	64	105	84	up to 1600 mm^2
HVCA-INST-CONE-72/110	72	110	91	up to 2000 mm^2
HVCA-INST-CONE-80/121	80	121	98	up to 2500 mm^2

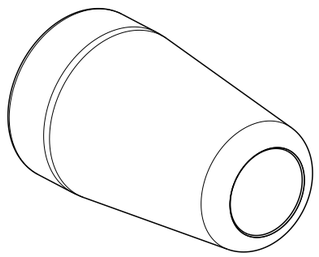

1:2

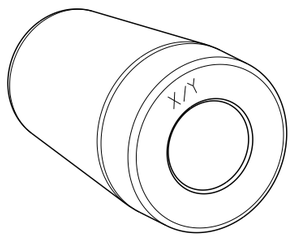

$\sqrt{R_z\ 6.3}$

Allgemeintoleranz /
General tolerance ISO 2768 - mK

LTR	REVISION RECORD	DATE	DWN	APVD

DIMENSIONS: mm

TOLERANCES UNLESS OTHERWISE SPECIFIED:

0 PLC	±-
1 PLC	±-
2 PLC	±-
3 PLC	±-
4 PLC	±-

ANGLES±

SURFACE TEXTURE -$\sqrt{}$

DWN MRI	07AUG2019	MATERIAL POM –
CHK THK	07AUG2019	HEAT TREAT – –
APVD ALE	07AUG2019	TE Connectivity

NAME HVCA-INST-CONE-X/Y

SCALE	SIZE	DRAWING NO	SHEET	REV
1:1	A3	EPD-204-2190-00	1 OF 1	–

3306-7 (7/17)

8 7 6 5 4 3 2 1

D C B A